KGE-TYPE

DIMENSIONS

KGE-3640 BLDC SERIES

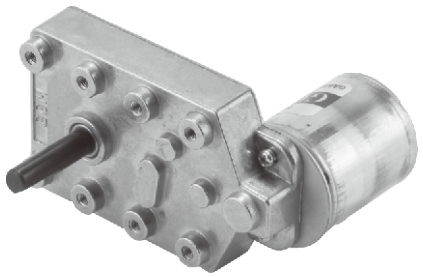

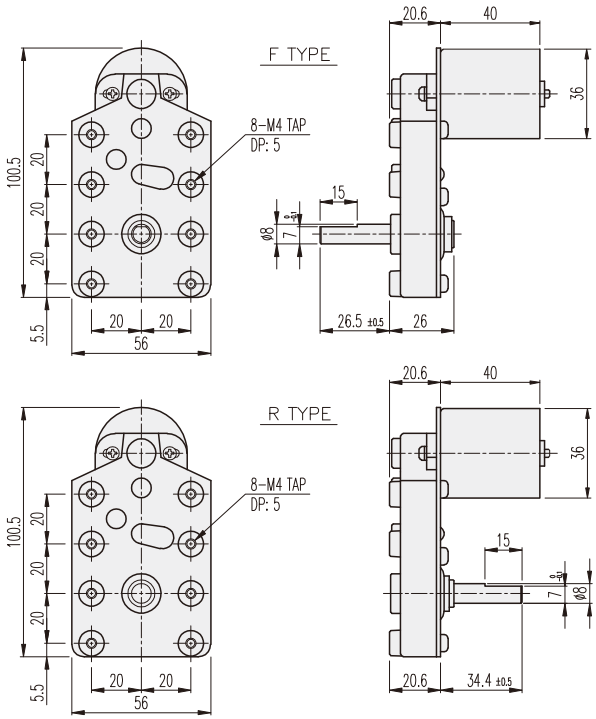

BLDC MOTOR PERFORMANCE DATA

MODEL \ ITEM	VOLTAGE (DC)	NO LOAD		AT MAX. EFF.			WEIGHT (g)
		mA	rpm	gf·cm	A	rpm	
NB3640S1	12V	500	5300	150	1.2	4500	150
NB3640S2	24V	300	5000	250	0.8	3900	

AT MAXIMUM EFFICIENCY (KGE-□□□-NB3640S□)

MODEL / GEAR	NB3640S1		NB3640S2	
	DC 12V		DC 24V	
	rpm	kgf·cm	rpm	kgf·cm
1/022	204	2.4	177	4
1/034	132	3.7	114.7	6.2
1/043	104.5	4.7	90.6	7.8
1/050	90	5.4	78	9.1
1/062	72.5	6.7	62.9	11.3
1/068	66	7.4	57.3	12.4
1/083	54	9	46.9	15.1
1/105	42.8	11.4	37.1	19.1
1/116	38.7	12.6	33.6	20
1/162	27.7	15.9	24	20
1/182	24.7	17.9	21.4	20
1/204	22	20	19.1	20
1/240	18.7	20	16.2	20
1/308	14.6	20	12.6	20
1/350	12.8	20	11.1	20
1/452	9.9	20	8.6	20
1/615	7.3	20	6.3	20
1/687	6.5	20	5.6	20

* ( ) color gear ratios are same rotation direction with motor.
* Proceed function change in motor stop type.
* Controller for speed control is GUN type.
* The standard is F-TYPE.

How to connect when speed control is not needed.

No - Color	Pin - Contents	Connection Method
1 - White	Brake	No Use, (-) connectin Brake
2 - Blue	PWM	connecting to (-) power
3 - Yellow	1FG(6P/R)	No Use
4 - Orange	CW/CCW	Normal Open, CCW connecting to (-) power
5 - Black	GND	connecting to (-) power
6 - Red	24V	connecting to (+) power
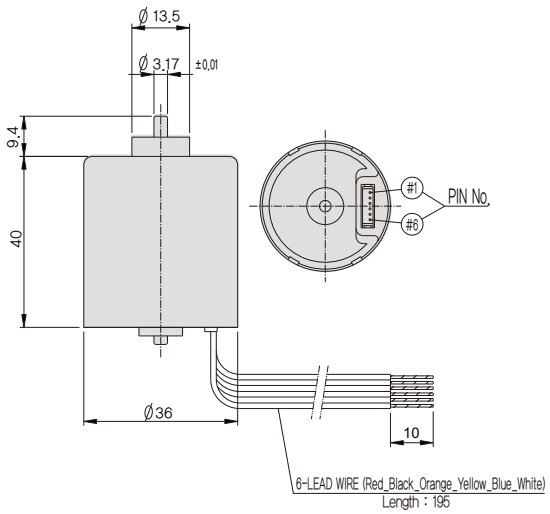
* Please be cautious that Motor can be damaged when connected to incorrect power (+) (-).